NOTICE OF PROPRIETARY RIGHTS THIS DOCUMENT CONTAINS CONFIDENTIAL DATA, INCLUDING TRADE SECRETS, PROPRIETARY TO TIMES MICROWAVE SYSTEMS. DISCLOSURE OF THIS DATA IS EXPRESSLY CONDITIONED UPON YOUR ASSENT THAT ITS USE IS LIMITED TO USE WITHN YOUR COMPANY ONLY. ANY OTHER USE IS STRICTLY PROHIBITED WITHOUT THE PRIOR WRITTEN CONSENT OF TIMES MICROWAVE SYSTEMS.

SYM	REVISION DESCRIPTION	DFTM	DATE	APPD	APPD
A	RELEASED FOR PRODUCTION	Joslen	2016.07.15	TZ	2016.07.15

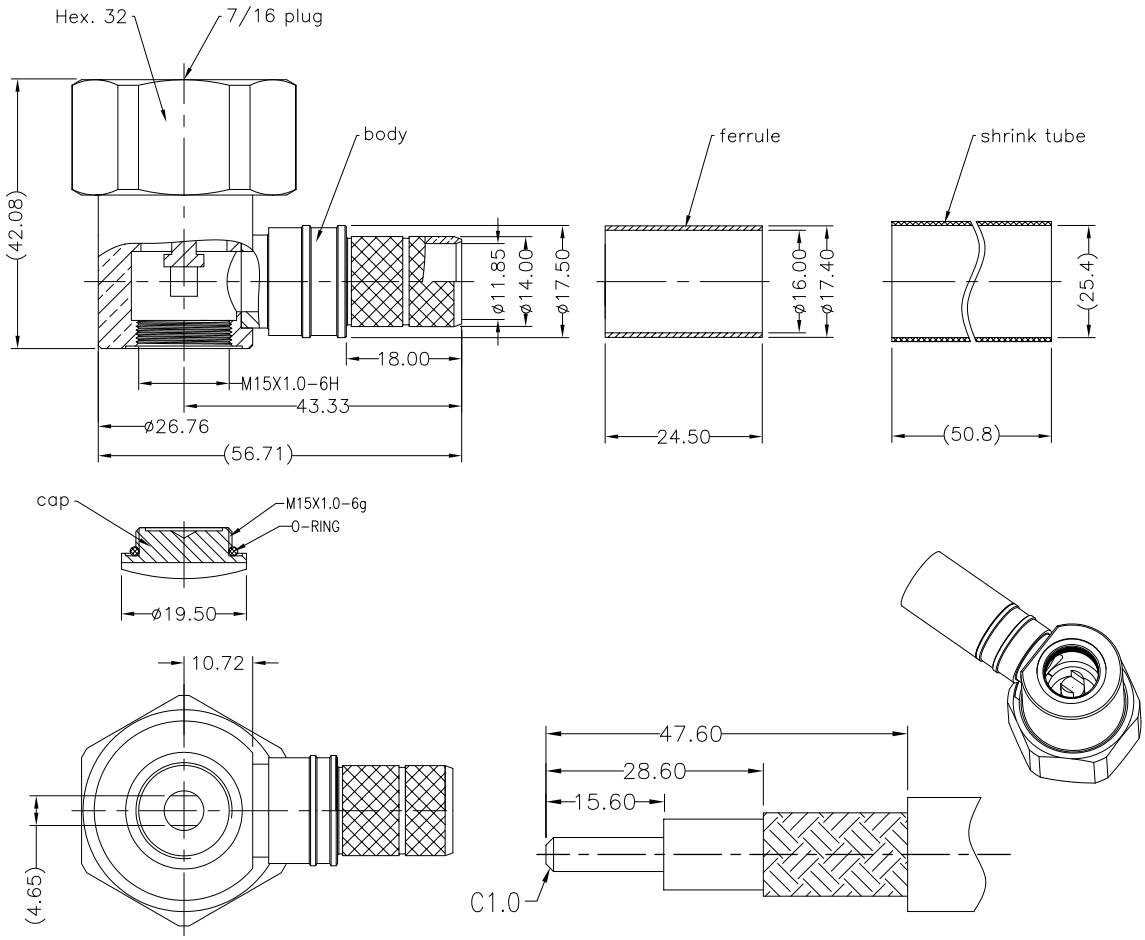

RECOMMENDED CABLE STRIPPING DIM'S
Connector adds: 10.6 mm

I. MATERIALS & FINISHES

Components	Materials	Finishes	Thk. (µ")
Body	Brass	Albaloy	80
Center Cont.	PB BRONZE	Silver	200
Clamper	Brass	Albaloy	80
Nut	Brass	Albaloy	80
Insulator	PTFE	--	--
Gaskt	Silicone	--	--

II. ELECTRICAL PROPERTIES

Impedance (Ω):	50
Frequency Range (GHz):	DC to 6 GHz
Working Voltage (V):	2500
Insulation Resistance (MΩ):	≥10000
VSWR:	≤1.35
Insertion Loss(dB, f/GHz):	$-0.05x\sqrt{f}$

III. ENVIRONMENT PROPERTIES

Temperature Range:	-55°c~+125°c
Thermal Shock:	MIL-STD 202G, Meth.107, Cond.B
Vibration:	MIL-STD 202G, Meth.204, Cond.B
Shock:	MIL-STD 202G, Meth.213, Cond I
Climatic Class:	IEC 60068 55/155/56
(2002/95/EC)RoHS:	Compliant

IV. MECHANICAL PROPERTIES

Center Cont.:	Solder
Outer Cont.:	Crimp
Coupling Nut Torque (N.m):	25
Cbl-Connector Retention Force (N):	500
Durability (cycles):	500

According to Standard: IEC 61169-4

MATL:	UNLESS OTHERWISE SPECIFIED			DFTM.	Joslen	TIMES MICROWAVE SYSTEMS An Amphenol Company		
	ALL DIMENSIONS ARE IN mm MACHINED SURFACES FINISH 1.6 RMS MAX. REMOVE ALL BURRS 0.15X45° MAX. BREAK MACHINE CORNERS 0.15X45° D MAX. FILLET R. TOLERANCES ON DECIMALS .X ±0.3 .XX ±0.15 ANGLES ±2° FRACTIONS ± N/A			DATE	2016.07.15			
				CHKD	KG	TC-600-716M-RA-D		
				DATE	2016.07.15	7/16 Male (Plug) Right Angle Solder Pin Connector for LMR-600 Cable		
USED ON: O				APPD	TZ			
SCALE: N/A	DWG SIZE A4	DO NOT SCALE DRAWING	CODE IDENT 68999	DATE	2016.07.15	SHT 1 OF 1	3190-6211	REV A

Mouser Electronics

Authorized Distributor

Click to View Pricing, Inventory, Delivery & Lifecycle Information:

Amphenol:

TC-600-716M-RA-D